UNIVERSITY OF CAMBRIDGE INTERNATIONAL EXAMINATIONS
General Certificate of Education
Advanced Subsidiary Level and Advanced Level

MATHEMATICS **9709/43**

Paper 4 Mechanics 1 **(M1)** **October/November 2011**

1 hour 15 minutes

Additional Materials: Answer Booklet/Paper
Graph Paper
List of Formulae (MF9)

READ THESE INSTRUCTIONS FIRST

If you have been given an Answer Booklet, follow the instructions on the front cover of the Booklet.
Write your Centre number, candidate number and name on all the work you hand in.
Write in dark blue or black pen.
You may use a soft pencil for any diagrams or graphs.
Do not use staples, paper clips, highlighters, glue or correction fluid.

Answer **all** the questions.
Give non-exact numerical answers correct to 3 significant figures, or 1 decimal place in the case of angles in degrees, unless a different level of accuracy is specified in the question.
Where a numerical value for the acceleration due to gravity is needed, use $10\,\mathrm{m\,s^{-2}}$.
The use of an electronic calculator is expected, where appropriate.
You are reminded of the need for clear presentation in your answers.

At the end of the examination, fasten all your work securely together.
The number of marks is given in brackets [ ] at the end of each question or part question.
The total number of marks for this paper is 50.
Questions carrying smaller numbers of marks are printed earlier in the paper, and questions carrying larger numbers of marks later in the paper.

This document consists of **4** printed pages.

© UCLES 2011

1

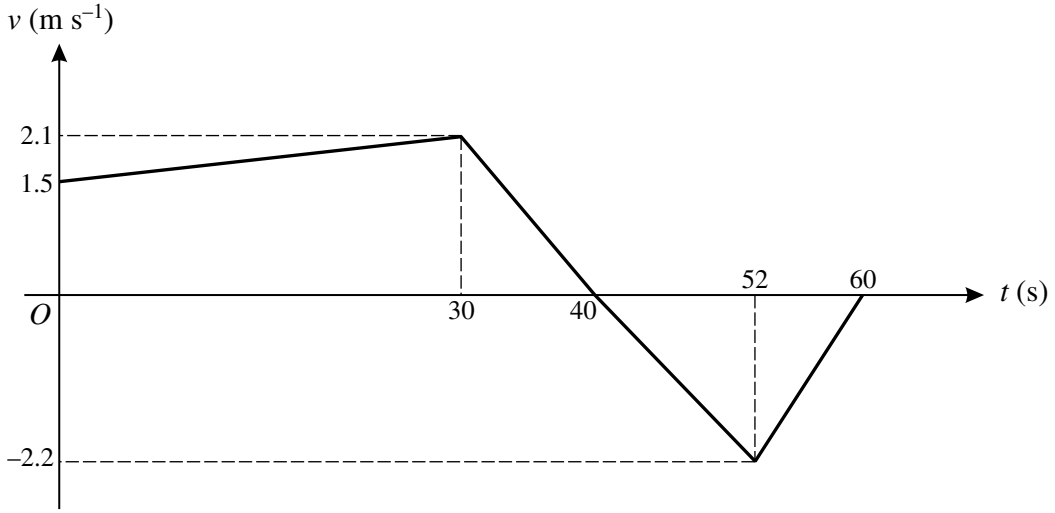

A woman walks in a straight line. The woman's velocity t seconds after passing through a fixed point A on the line is $v\,\mathrm{m\,s^{-1}}$. The graph of v against t consists of 4 straight line segments (see diagram). The woman is at the point B when $t = 60$. Find

(i) the woman's acceleration for $0 < t < 30$ and for $30 < t < 40$, [3]

(ii) the distance AB, [2]

(iii) the total distance walked by the woman. [1]

2

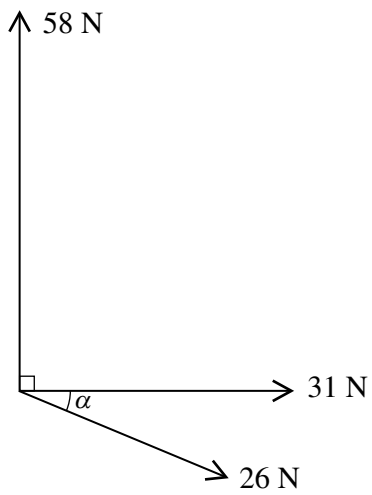

Coplanar forces of magnitudes 58 N, 31 N and 26 N act at a point in the directions shown in the diagram. Given that $\tan\alpha = \frac{5}{12}$, find the magnitude and direction of the resultant of the three forces. [6]

3 Particles P and Q are attached to opposite ends of a light inextensible string which passes over a fixed smooth pulley. The system is released from rest with the string taut, with its straight parts vertical, and with both particles at a height of 2 m above horizontal ground. P moves vertically downwards and does not rebound when it hits the ground. At the instant that P hits the ground, Q is at the point X, from where it continues to move vertically upwards without reaching the pulley. Given that P has mass 0.9 kg and that the tension in the string is 7.2 N while P is moving, find the total distance travelled by Q from the instant it first reaches X until it returns to X. [6]

© UCLES 2011

4

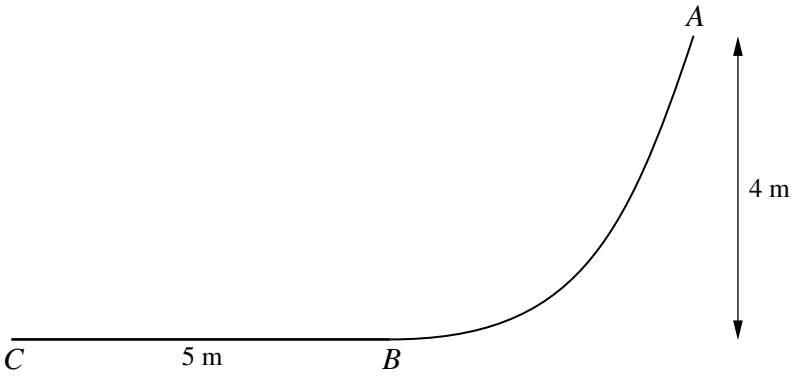

ABC is a vertical cross-section of a surface. The part of the surface containing AB is smooth and A is 4 m higher than B. The part of the surface containing BC is horizontal and the distance BC is 5 m (see diagram). A particle of mass 0.8 kg is released from rest at A and slides along ABC. Find the speed of the particle at C in each of the following cases.

(i) The horizontal part of the surface is smooth. [3]

(ii) The coefficient of friction between the particle and the horizontal part of the surface is 0.3. [3]

5 A particle P moves in a straight line. It starts from rest at A and comes to rest instantaneously at B. The velocity of P at time t seconds after leaving A is $v\,\mathrm{m\,s^{-1}}$, where $v = 6t^2 - kt^3$ and k is a constant.

(i) Find an expression for the displacement of P from A in terms of t and k. [2]

(ii) Find an expression for t in terms of k when P is at B. [1]

Given that the distance AB is 108 m, find

(iii) the value of k, [2]

(iv) the maximum value of v when the particle is moving from A towards B. [3]

6

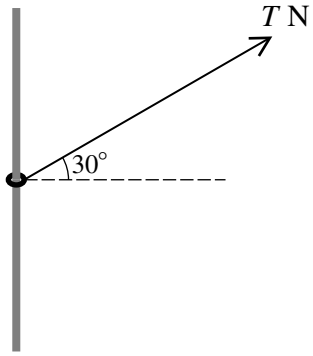

The diagram shows a ring of mass 2 kg threaded on a fixed rough vertical rod. A light string is attached to the ring and is pulled upwards at an angle of 30° to the horizontal. The tension in the string is T N. The coefficient of friction between the ring and the rod is 0.24. Find the two values of T for which the ring is in limiting equilibrium. [8]

7 A car of mass 600 kg travels along a straight horizontal road starting from a point A. The resistance to motion of the car is 750 N.

(i) The car travels from A to B at constant speed in 100 s. The power supplied by the car's engine is constant and equal to 30 kW. Find the distance AB. [3]

(ii) The car's engine is switched off at B and the car's speed decreases until the car reaches C with a speed of $20\,\mathrm{m\,s^{-1}}$. Find the distance BC. [3]

(iii) The car's engine is switched on at C and the power it supplies is constant and equal to 30 kW. The car takes 14 s to travel from C to D and reaches D with a speed of $30\,\mathrm{m\,s^{-1}}$. Find the distance CD. [4]

Permission to reproduce items where third-party owned material protected by copyright is included has been sought and cleared where possible. Every reasonable effort has been made by the publisher (UCLES) to trace copyright holders, but if any items requiring clearance have unwittingly been included, the publisher will be pleased to make amends at the earliest possible opportunity.

University of Cambridge International Examinations is part of the Cambridge Assessment Group. Cambridge Assessment is the brand name of University of Cambridge Local Examinations Syndicate (UCLES), which is itself a department of the University of Cambridge.

© UCLES 2011